SUPPLEMENTAL

DESCRIPTION OF MANUFACTURE

ITEM: GUN, BROWNING MACHINE, CALIBER .30, M1919A6

VOLUME 1 OF 1

CONTENTS: GENERAL MANUFACTURING DATA

Note: This publication, when used with Description of Manufacture prepared for Gun, Browning Machine, Cal..30, M1919A4, will give complete manufacturing data on both the M1919A4 and M1919A6 Guns.

DATE 1 NOVEMBER 1945

FORM NO. SPOBC-29 AE 26 OCT.. 1944

RIA-10-28-44-600

HEAT TREATMENT & FINAL FINISH	PHYSICAL PROPERTIES						JUNE 1, 1939
	YP		DED		SCL		REVISIONS
FINISH TYPE II CLASS A OR B	TS		BR				1 10-12-43
	EL 2		ROCK				2 12-20-43
							3 6-1-44

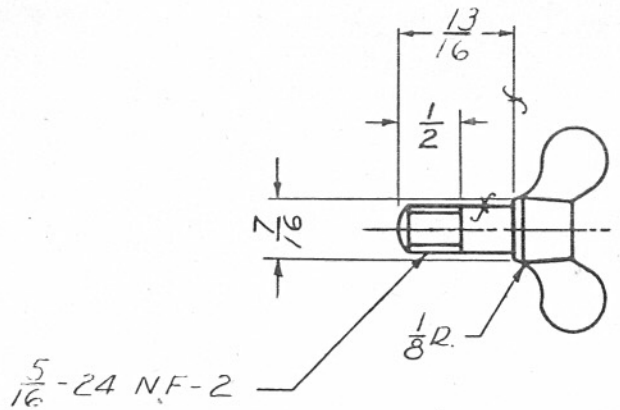

SCREW, THUMB

STEEL - 5/16 COMMERCIAL BLANK

(A) A152774-2

REF. SA 12037

TOLERANCE ± .01 ALLOWED ON ALL DIMENSIONS UNLESS OTHERWISE SPECIFIED.

SCALE 1/1

A152774

ORG. PERTAINS TO

51-102	30BAR-M18 A2
D7312239	BIPOD, ASSEMBLY
51-125	30BMG-M19A6

SYMBOL

DFTSMAN	TRACED	LOG DFTSMAN
C.J.R.		
CHECKER		CHIEF DFTSMAN

SUBMITTED:-

MAJOR ORD DEPT U.S.A

APPROVED BY ORDER OF THE CHIEF OF ORDNANCE:-

LT COL ORD. DEPT U.S.A

ORDNANCE DEPT. U.S.A

A7110440

HEAT TREATMENT & FINAL FINISH	PHYSICAL PROPERTIES					
	Y. P.		RED.		SCL.	
	T. S.		BR.			
	EL. 2		ROCK			

JANUARY 31, 1944

REVISIONS

1	3-4-44		

DRG. PERTAINS TO

51-83	.30 CAL. B.M.G. M1919A4 (FXD)
51-84	.30 CAL. B.M.G. M1919A4 (FLEX)
51-125	.30 CAL. B.M.G. M1919A6
B144235	SIGHT, BRACKET ASSEMBLY

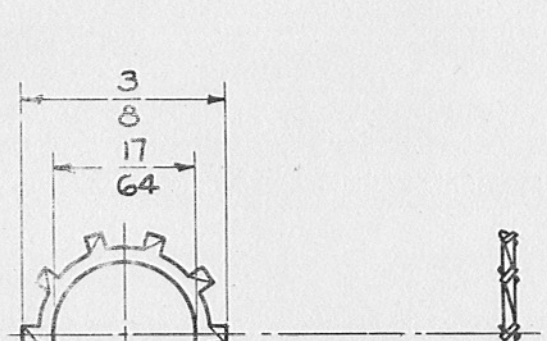

WASHER, LOCK

7110440

.022 STEEL - COMMERCIAL

SHAKEPROOF EXTERNAL TOOTH LOCK WASHER NO. 1114-05 OR EQUAL

TOLERANCE ON DIMENSIONS NOT OTHERWISE SPECIFIED
DECIMAL ± —
FRACTIONAL ± —
ANGULAR ± —

DRAFTSMAN	TRACER	L'D'G DRAFTSMAN
W.B.26.	W.B.26.	A.M.R.
CHECKER	O.O.	CHIEF DRAFTSMAN
[illegible]		

SUBMITTED:
A.M. ROE

APPROVED BY ORDER OF THE CHIEF OF ORDNANCE:
Geo. H. Burton
CAPT. ORD. DEPT., U. S. A.

ORDNANCE DEPT., U. S. A.

SCALE 4/1 | A | 7110440

MADE AT ROCK ISLAND ARSENAL

A 7123315

HEAT TREATMENT & FINAL FINISH	PHYSICAL PROPERTIES					
	Y. P.		RED		SCL	
	T. S.		BR			
	EL 2					

MAY 25, 1945

REVISIONS

51-84	.30 BMG-M19A4(FLEX)
51-114	.30BMG-M1919A5(FXD)
51-125	.30BMG-M1919A6

DRG. PERTAINS TO

C9801	COVER, ASSEMBLY
C9814	COVER, W/O REAR SIGHT FIXED BASE ASSY.
51-10	.30BMG-M17A1(WC)
51-83	.30BMG-M19A4(FXD)

~~DO~~ INSCRIBE PART NO. DO NOT

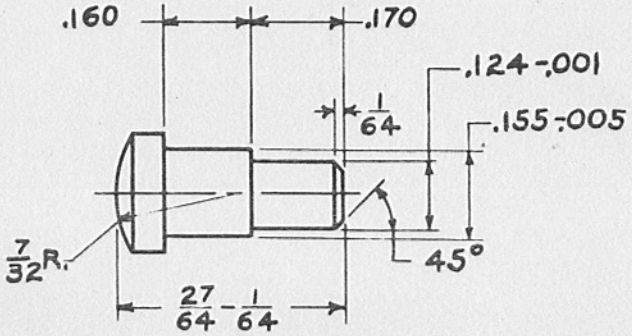

TOLERANCE ON DIMENSIONS NOT OTHERWISE SPECIFIED
DECIMAL .005
FRACTIONAL 1/64
ANGULAR 5°

DRAFTSMAN	TRACER	L.D.G. DRAFTSMAN
W.O.F.	W.O.F.	
CHIEF		CHIEF DRAFTSMAN

STUD, COVER EXTRACTOR SPRING (7123315)

STEEL WD 1115
FINISH 125
MANUFACTURING COMPONENT

SUBMITTED:
A. W. Roe

APPROVED BY ORDER OF THE CHIEF OF ORDNANCE
Welton J. Crook
COL. ORD. DEPT. U. S. A.

SUPERSEDES A24604
WITH CHANGE 5-25-45

SCALE 4/1

A	7123315

ORDNANCE DEPT., U. S. A.

MADE AT ROCK ISLAND ARSENAL

A 7162161

HEAT TREATMENT & FINAL FINISH	PHYSICAL PROPERTIES					
HEAT TREAT FINISH TYPE II CLASS B	Y. P.		RED.		SCL.	
	T. S.		BR.			
	EL 2		ROCK	C44-48		

MAY 25, 1945

REVISIONS

DRG. PERTAINS TO	
51-125	CAL. .30 B.M.G.
	M1919A6

~~DO~~ INSCRIBE PART NO. DO NOT

TOLERANCE ON DIMENSIONS NOT OTHERWISE SPECIFIED
DECIMAL ± ——
FRACTIONAL ± 1/64
ANGULAR ± 2°

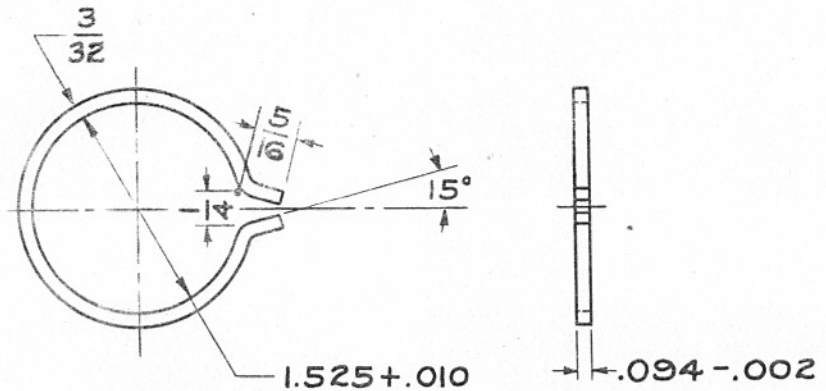

DRAFTSMAN	TRACER	L'D'G DRAFTSMAN
M.C.	M.C.	
CHECKER	O.O.	CHIEF DRAFTSMAN
W.B.H.		

SUBMITTED:
A. W. Roe

APPROVED BY ORDER OF THE CHIEF OF ORDNANCE:
Welton J. Crook
COL., ORD. DEPT., U. S. A.

ORDNANCE DEPT., U. S. A.

RING, LOCK

SPRING STEEL WD 1060

FINISH 63

7162161

SUPERSEDES A238235
WITH CHANGE 5-25-45

SCALE 1/1 | A | 7162161

MADE AT ROCK ISLAND ARSENAL

HEAT TREATMENT & FINAL FINISH	PHYSICAL PROPERTIES						JUNE 1, 1944
CASE HARDEN .005 TO .01 DEEP. FILE HARD.	Y.P.		RED.		ROCK.		REVISIONS
FINISH TYPE II CLASS A OR B	T.S.		BR.				1 7-13-44
	EL.2						2 8-5-44
							3 12-21-44
							4 1-22-45

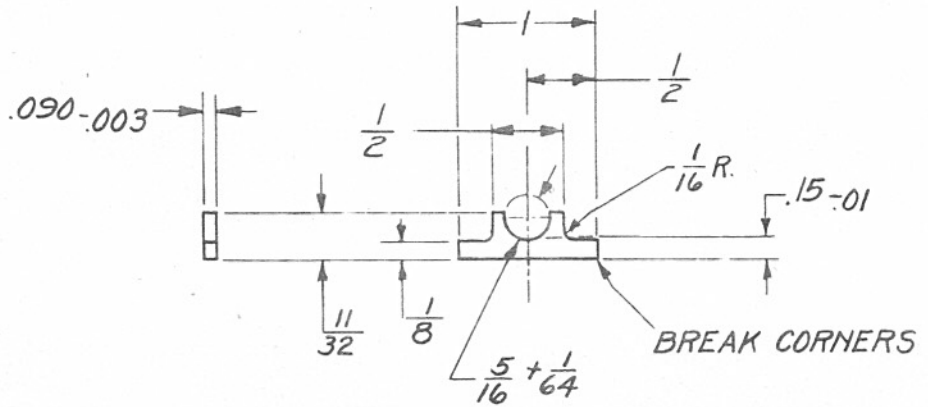

KEY 7312238-4

STEEL-WD1020 OR WDX1020

FINISH f

SUPERSEDES OLD TRACING A152776 UNDER REVISION DATE OF JUNE 1, 1944.

TOLERANCE ±.01 ALLOWED ON ALL DIMENSIONS UNLESS OTHERWISE SPECIFIED.

SCALE 1/1

SPRINGFIELD ARMORY

A 7312238

DR'G. PERTAINS TO

51-102	.30 BAR - M18 A2
D7312239	BIPOD, ASSEMBLY
51-125	.30 BMG - M19 A6

D'FTSMAN	TRACER	L'DG. D'FTSMAN
F.C.L.	F.C.L.	L.A.C.

CHECKER	S.A.	O.O.	CHIEF D'FTSMAN	S.A.	O.O.
L.A.C.			[illegible]		

SUBMITTED:-

E. Ambrose

ORD. ENG. ORD. DEPT.

APPROVED BY ORDER OF THE CHIEF OF ORDNANCE:-

C.R. Tillinghast

LT. COL. ORD. DEPT.

ORDNANCE DEPT., U. S. A.

HEAT TREATMENT AND FINAL FINISH

FINISH TYPE II CLASS B

PHYSICAL PROPERTIES

MAY 25, 1945

REVISIONS

DRG. PERTAINS TO

51-125 .30 BMG-M1919A6

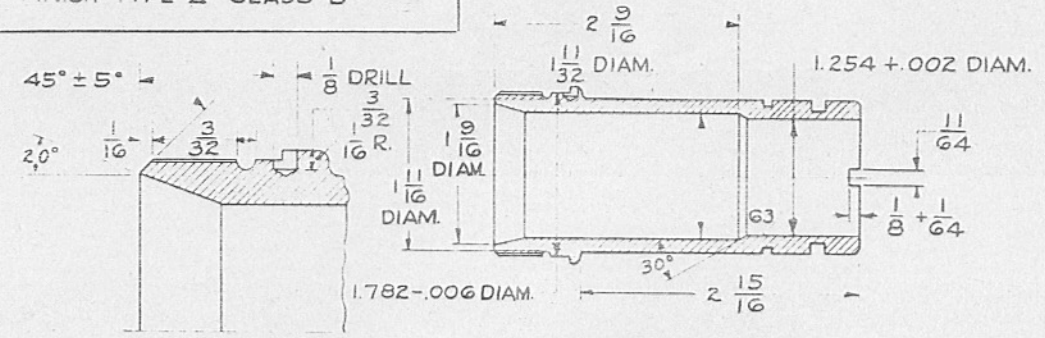

SECTION A-B

SCALE 2/1

SECTION A-A

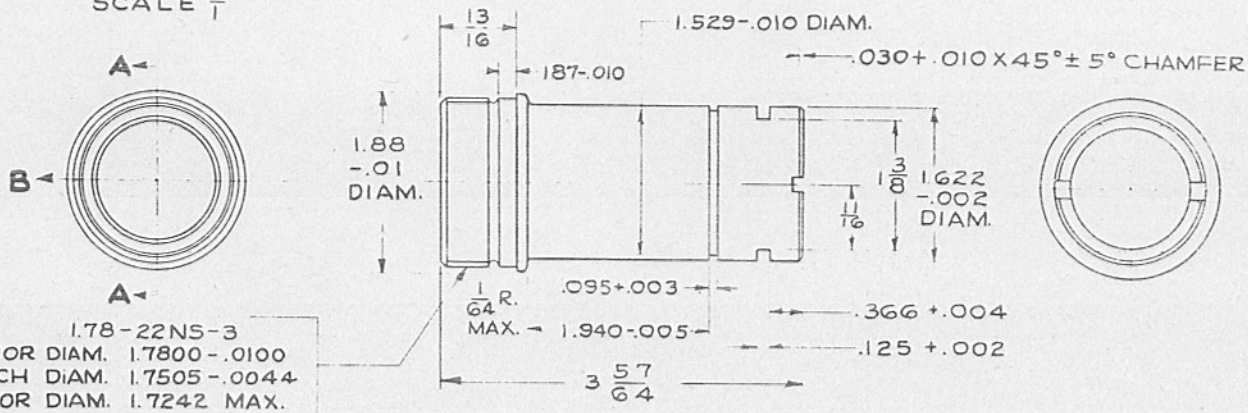

1.78-22NS-3
MAJOR DIAM. 1.7800-.0100
PITCH DIAM. 1.7505-.0044
MINOR DIAM. 1.7242 MAX.

BEARING, BARREL, FRONT

PEARLITIC MALLEABLE IRON-CLASS B

FINISH 125 UNLESS OTHERWISE SPECIFIED

7162160

SUPERSEDES B7160453 WITH CHANGE 5-25-45

SCALE 1/1

B 7162160

DO NOT INSCRIBE PART NO.

TOLERANCES UNLESS OTHERWISE SPECIFIED
DECIMAL —
FRACTIONAL 1/64
ANGULAR 1°

M.C. M.C.
WBH

SUBMITTED
H.H. Roe

APPROVED BY ORDER OF THE CHIEF OF ORDNANCE
Welton J. Brook
Col.

ORDNANCE DEPT U.S.A.

SCREW, CAP, HEX. HD., NF-2
(AUTOMOTIVE HEX. HEAD BOLT)

BCBX5

ORDNANCE LIMITED STANDARD (ORDNANCE DESIGN)

H-G H — APPROVED — 2-17-31 — DATE

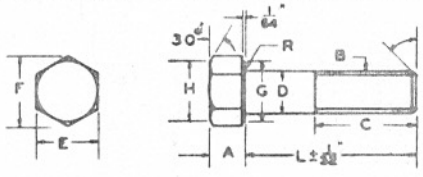

NOMINAL DIAMETER		1/4	5/16	3/8	1/2	3/4	1	
B THREADS PER INCH		28	24	24	20	16	14	
D BODY DIAMETER	MAX.	.2500	.3125	.3750	.5000	.7500	1.0000	
	MIN.	.2460	.3085	.3710	.4960	.7450	.9950	
E HEAD WIDTH	NOM.	7/16	1/2	9/16	3/4	1	1-5/16	
	MAX.	.4375	.5000	.5625	.7500	1.0000	1.3125	
	MIN.	.428	.489	.551	.736	.983	1.292	
F WIDTH ACROSS CORNERS	MIN.	.488	.557	.628	.840	1.121	1.473	
A THICKNESS	NOM.	3/16	15/64	9/32	3/8	5/16	3/4	
	MAX.	.194	.242	.289	.386	.577	.768	
	MIN.	.181	.227	.273	.364	.548	.732	
C FULL THREAD LENGTH	MAX.	15/16	1-1/16	1-3/16	1-7/16	1-15/16	2-1/16	
	MIN.	3/4	7/8	1	1-1/4	1-3/4	2-1/4	
R RADIUS	MAX.	1/64	1/64	1/64	1/64	1/32	1/32	
* UNTHREADED LENGTH	MAX.	1/16	1/16	1/16	1/16	3/32	3/32	

L LENGTH	ORDNANCE PART NUMBER, PLAIN FINISH						
3/8	216251						
1/2	216253	216282	216311	216340			
5/8	218394	216284	218357				
1					216373		
1-1/8	427310		426600				
2-3/4						216408	
2-7/8		218330					
3						216410	
3-1/8	216266						
3-1/4			216325			216412	
3-1/2	216268	216297	216326			216413	
3-3/4			216327			216414	
4			216328				
4-1/4		216300		216358			
4-1/2	216272		216330	216359			
4-3/4			216331	216360			
5	216274	216303	216332	216361	216390		
5-1/4			216333		216391		
5-1/2	216276	216305	216334	216363	216392	216421	
5-3/4			216335	216364			
6				216365	216394		
6-1/4				216366			

L LENGTH	ORDNANCE PART NUMBER, CADMIUM OR ZINC PLATED						
3/8	216252						
1/2	213875	213896					
5/8	213878	213901	213919				
1-1/8		216289	216318	216347			
1-7/8		216291	216320				

L LENGTH	ORDNANCE PART NUMBER, LEAD COATED						
1/2		225807					
2-7/8			426400	544261			
1-1/4							
7/8			427706				

L LENGTH	ORDNANCE PART NUMBER, PHOSPHATE COATED						
5/8	426346						

FOR ADDITIONAL LENGTHS SEE DRAWINGS BCBX1.1, BCBX1.2, BCBX6, BCBX6.1, BCBX5.1, BCBX2.1. DIMENSIONS IN INCHES.

MATERIAL: CARBON STEEL - MIN. YIELD STRENGTH - 60,000 P.S.I.

EXAMPLE FOR ORDERING: SCREW, CAP, HEX. HEAD, STEEL, (PLAIN FINISH), 3/4" - 16NF-2 x 1", DRG. BCBX5, ORD. PART NO. 216373.

TOLERANCES

MINIMUM BODY DIAMETER: MINUS .004" ON SIZES 1/4" TO 1/2" INCL., MINUS .005" ON SIZES ABOVE 1/2"

MINIMUM FULL THREAD LENGTH = 2D + 1/4"; MAX. = MIN. + 3/16".

*MAXIMUM UNTHREADED LENGTH = 1-1/2 X PITCH TO NEAREST 1/32" FOR CAP SCREWS TOO SHORT TO ALLOW FORMULA THREAD LENGTH.

DIAMETER OF WASHER FACE G = E MAX. -5%; DIAMETER OF TOP CIRCLE H = E MAX. -15%

SUPERSEDES OLD TRACING BCBX5 UNDER REVISION DATE OF 2-16-45

REVISION (A) 2-16-45

WASHER, LOCK, "TOOTH" TYPE
INTERNAL TOOTH

BEAXI

ORDNANCE STANDARD (COMMERCIAL)

HBH APPROVED 5-11-33 DATE

SUPERSEDES OLD TRACING BEAXI UNDER REVISION DATE OF 5-6-44

NOTE: EITHER TYPE A OR TYPE B IS ACCEPTABLE.

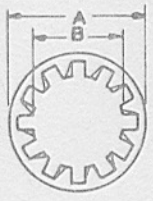

TYPE A

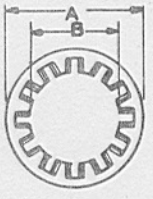

TYPE B

SIZE, NOMINAL		#2	#3	#4	#5	#6	#8
A OUTSIDE DIAMETER	MAX.	.200	.232	.270	.280	.295	.340
	MIN.	.175	.215	.255	.245	.275	.325
B INSIDE DIAMETER	MAX.	.095	.109	.123	.136	.150	.176
	MIN.	.089	.102	.115	.120	.141	.168
C THICKNESS	MAX.	.015	.019	.019	.021	.021	.023
	MIN.	.010	.012	.015	.017	.017	.018
MATERIAL AND FINISH		ORDNANCE PART NUMBER					
STEEL PLAIN		190638	178835	116042	180156	115543	115544
STEEL CADMIUM OR ZINC PLATED		188131	179162	138522	147755	138526	138530
STEEL NICKEL PLATED		180088	180135	118937	180184	118924	118925
STEEL CHROMIUM PLATED		180049	180133	138523	180182	138527	138531
STEEL PHOSPHATE COATED		180090	180154	138524	180186	138528	138166
PHOSPHOR BRONZE PLAIN		221117	228809	228810	228821	190669	190670
PHOSPHOR BRONZE TINNED		424227	424219	424220	424221	219891	225843

SIZE, NOMINAL		#10	#12	#14 & 1/4	5/16	3/8	
A OUTSIDE DIAMETER	MAX.	.381	.410	.478	.610	.692	
	MIN.	.365	.394	.460	.594	.670	
B INSIDE DIAMETER	MAX.	.204	.231	.267	.332	.398	
	MIN.	.195	.221	.256	.320	.384	
C THICKNESS	MAX.	.025	.025	.028	.034	.040	
	MIN.	.020	.020	.023	.028	.032	
MATERIAL AND FINISH		ORDNANCE PART NUMBER					
STEEL PLAIN		115545	115546	115547	115548	115549	
STEEL CADMIUM OR ZINC PLATED		121801	125774	120423	138538	138542	
STEEL NICKEL PLATED		118926	118927	118928	118929	118930	
STEEL CHROMIUM PLATED		138533	125775	138536	138539	138543	
STEEL PHOSPHATE COATED		138534	138181	138167	138540	138544	
PHOSPHOR BRONZE PLAIN		190672	228832	228834	190676	228847	
PHOSPHOR BRONZE TINNED		424222	424223	424224	424225	424226	

MATERIAL:
STEEL - SAE 1050 OR 1066 HEAT TREATED, ROCKWELL HARDNESS C40-C50 OR EQUIVALENT.
PHOSPHOR BRONZE - SPECIFICATION QQ-B-746.

DIMENSIONS IN INCHES

NOTE: FOR SPECIFICATIONS SEE DRG. BEAX10.
EXAMPLE FOR ORDERING: WASHER, LOCK, TOOTH TYPE, STEEL, 3/8" (PLAIN), DRG. BEAX1, ORD. PART NO. 115549.

REVISION ⑤ 5-6-44 ⑥ 10-3-44

WASHER, PLAIN

(S.A.E. STANDARD)

BEBX1

ORDNANCE STANDARD (COMMERCIAL)

H&H APPROVED 6/15/37 DATE

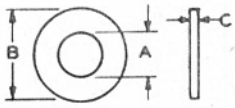

NOMINAL SIZE	DIAMETER INSIDE - A -	DIAMETER OUTSIDE - B -	THICKNESS - C - ± .010	ORDNANCE PART NUMBER FOR THE FINISH SPECIFIED: STEEL (CARBON) PLAIN FINISH	STEEL (CARBON) CADMIUM OR ZINC	STEEL (CARBON) PHOSPHATE	STEEL (CARBON) BLACK ENAMEL	STEEL STAINLESS PLAIN	BRASS PLAIN	COPPER PLAIN
#2 (.086)	3/32	1/4	1/32	221415				221429	221417	221419
#4 (.112)	1/8	5/16	1/32	221416				221430	221418	221424
#6 (.138)	5/32	3/8	3/64	103337	131014	118674	112470	221431	113818	116101
#8 (.164)	3/16	7/16	3/64	114986	131015	118675	116076	148099	116089	114985
#10(.190)	7/32	1/2	1/16	103338	120391	118676	112471	221432	116090	113893
#12(.216)	1/4	9/16	1/16	147577	147579	147582	147578	221433	147583	147586
1/4	9/32	5/8	1/16	103339	120392	118773	112472	178474	116091	116102
5/16	11/32	11/16	1/16	103340	120393	118774	112473	221435	116092	115308
3/8	13/32	13/16	1/16	103341	120394	118775	112474	187372	116093	116103
7/16	15/32	15/16	1/16	103342	120395	118776	112475	221436	116094	116104
1/2	17/32	1-1/16	3/32	103343	120396	118777	112476	221437	116095	116105
9/16	19/32	1-3/16	3/32	103344	121458	118778	112477	221439	116096	116106
5/8	21/32	1-5/16	3/32	103345	131016	118779	112478	221440	116097	116107
11/16	23/32	1-3/8	3/32	147587	147589	147592	147588	221441	147593	147596
3/4	13/16	1-1/2	1/8	103346	131017	118780	112479	221442	116098	116108
7/8	15/16	1-3/4	1/8	103347	131018	118781	112480	221443	116099	116109
1	1-1/16	2	1/8	103348	131019	118782	112481	221444	116100	116110
1-1/8	1-3/16	2-1/4	1/8	172798	172810			221445	172834	221425
1-1/4	1-5/16	2-1/2	5/32	172799	172811			221446	172838	221426
1-3/8	1-7/16	2-3/4	5/32	172806	172812			221447	172839	221427
1-1/2	1-9/16	3	5/32	172807	172821			221448	172855	221428

MATERIAL: COMMERCIAL, AS ORDERED.

DIMENSIONS IN INCHES.

NOTE: WASHERS SHALL BE FLAT AND FREE FROM BURRS.

EXAMPLE FOR ORDERING: WASHER, PLAIN, STEEL, 1/4" (PLAIN FINISH), DRG. BEBX1, ORD. PART NO. 103339.

REFERENCE: S.A.E. HANDBOOK-1942.

SUPERSEDES OLD TRACING BEBXI UNDER REVISION DATE OF 4-22-44

REVISION ② 4/22/44 ③ 7/11/44 ④ 10-12-44

HEAT TREATMENT AND FINAL FINISH
PHOSPHATE BLACK

PHYSICAL PROPERTIES	
Y. P.	
T. S.	
EL. 2	
RED	
BR.	
ROCK.	
SCL.	

OCTOBER 6, 1942 REVISIONS				
3	7-22-43			
4	8-31-45			

DRG. PERTAINS TO	
51-125	30 BMC, M1941C

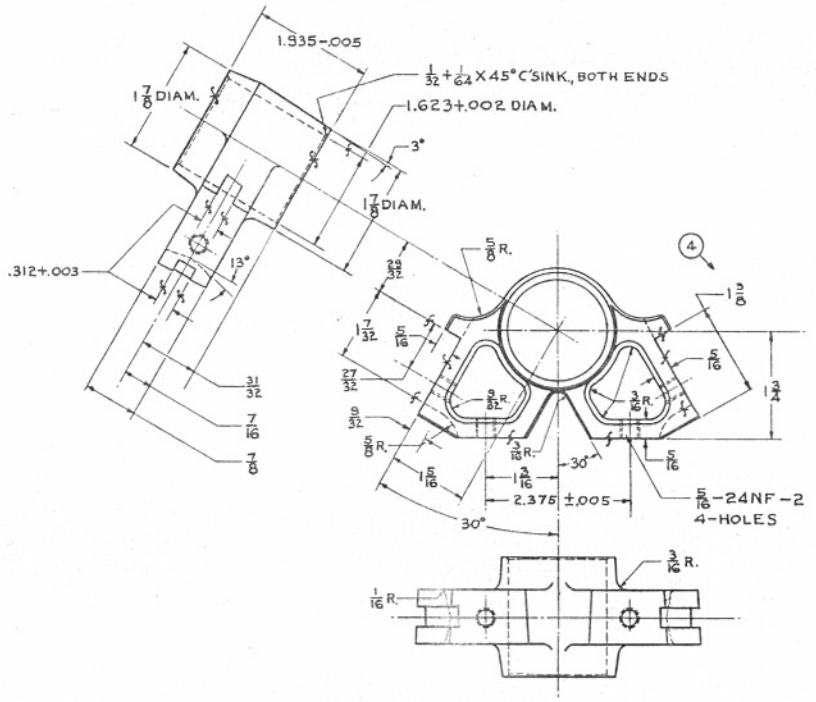

HEAD, BIPOD

PEARLITIC MALLEABLE IRON-CLASS B

C121092

TOLERANCE ON DIMENSION NOT OTHERWISE SPECIFIED
DECIMAL ± .005
FRACTIONAL ± 1/64
ANGULAR ± 1°

DRAFTSMAN	TRACER	U.S.A. DRAFTSMAN
H.E.M.	S.M.D.	
		CHIEF DRAFTSMAN

SUBMITTED:

APPROVED BY ORDER OF THE CHIEF OF ORDNANCE

CAPT. ORD. DEPT. U. S. A.

ORDNANCE DEPT., U. S. A.

MADE AT ROCK ISLAND ARSENAL

SUPERSEDES OLD VELLUM C121092 UNDER REVISION DATE OF 7-22-43

SCALE 1

C121092

HEAT TREATMENT AND FINAL FINISH

PHYSICAL PROPERTIES	MARCH 21, 1944 REVISIONS
Y. P.	
T. S.	
EL. 2	
RED	
BR.	
ROCK.	
SCL.	

DRG. PERTAINS TO	
D7114037	CASING, ASS'Y.
51-125	.30BMG, M19A6

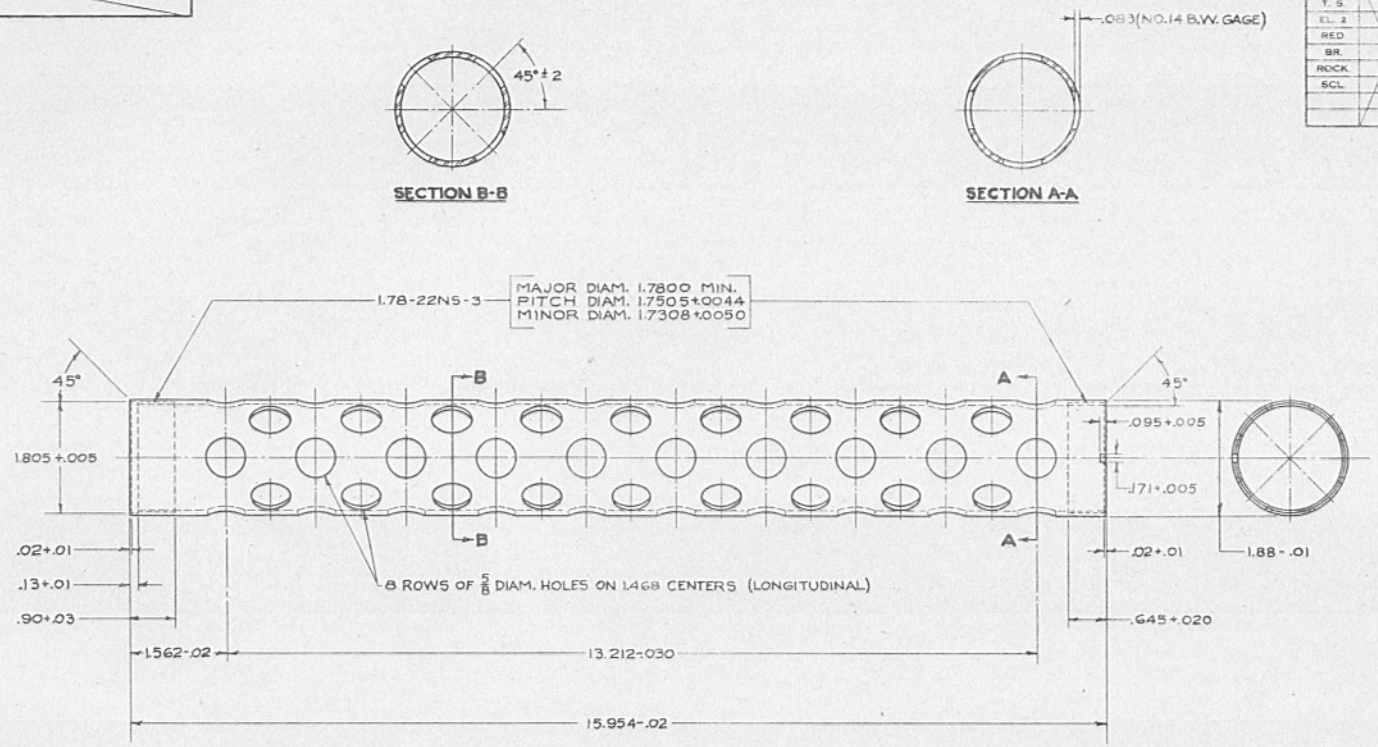

JACKET, BARREL (7160455)

SEAMLESS OR ELECTRIC RESISTANCE WELDED STEEL TUBING - WD1035
FINISH

TOLERANCE ON DIMENSIONS NOT OTHERWISE SPECIFIED
DECIMAL ± —
FRACTIONAL ± 1/64
ANGULAR ± 5°

DRAFTSMAN	TRACER	L.O.D. DRAFTSMAN
W.B.Z.	W.B.Z.	A.A.R.
CHECKED		CHIEF DRAFTSMAN

SUBMITTED: A.H. Roe

APPROVED BY ORDER OF THE CHIEF OF ORDNANCE:
COL. ORD. DEPT. U.S.A.

ORDNANCE DEPT., U. S. A.
MADE AT ROCK ISLAND ARSENAL

SUPERSEDES OLD TRACING C93962 UNDER REVISION DATE OF MARCH 21, 1944

SCALE 1/1 C 7160455

HEAT TREATMENT & FINAL FINISH
TO MEET PHYSICALS AND HARDNESS OF U.S.A. SPEC. 57-107-25 (4-5-40)
PHOSPHATE BLACK (EXCEPT BORE)

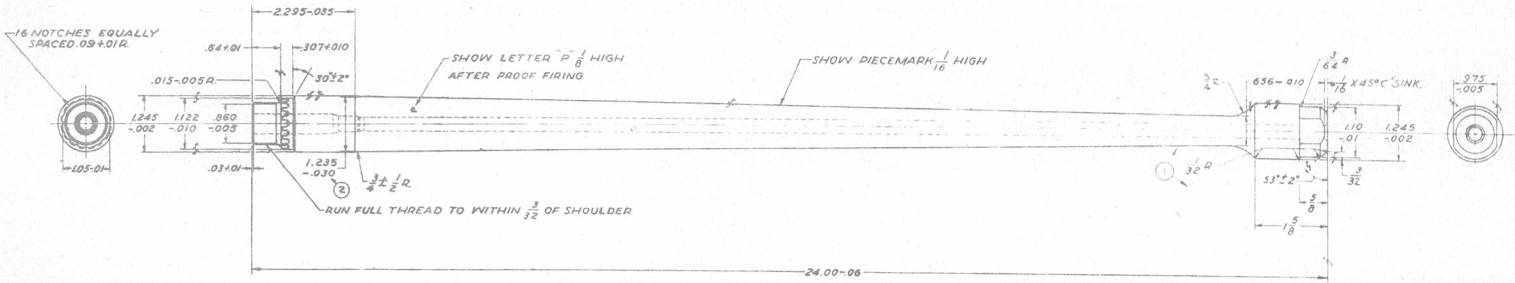

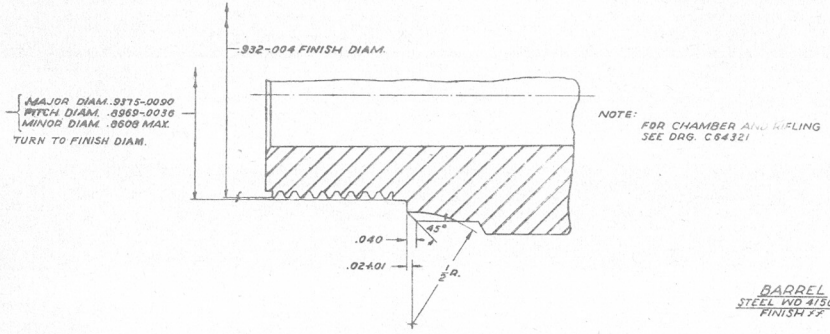

SECTION SHOWING THREADS AND NOTCH CUT
SCALE 5/1

BARREL
STEEL WD 4150 (MODIFIED) (D54559)
FINISH ff

SCALE 1/1

JULY 22, 1943			CLASS	DIVISION	DRAWING	REV.
REVISIONS						
1'	9-17-43					
2'	8-14-44					

TOLERANCE ON DIMENSIONS NOT OTHERWISE SPECIFIED
DECIMAL ±.01
FRACTIONAL ± 1/64
ANGULAR ± 5°

DRAFTSMAN	TRACER	LINE DRAFTSMAN
B.G.T.	B.G.T.	HHR

DRG. PERTAINS TO	
51-125	CAL. 30, BMG., M1919A6

SUBMITTED: H.H. Roe
EXAMINED:
APPROVED BY ORDER OF THE CHIEF OF ORDNANCE
Kenneth Nichols

D54559

ORDNANCE DEPT. U.S.A.

HEAT TREATMENT AND FINAL FINISH

FINISH TYPE II - CLASS B

LIST OF COMPONENTS

1 LINE NUMBER	2 DRAWING NUMBER OR PIECE MARK	3 NAME OF COMPONENT	4 NO. REQUIRED PER UNIT ASSY.
1	D7114037	CASING ASSEMBLY	* (1)
2		COMPOSED OF:-	
3	C48965	1- BASE, REAR SIGHT	*
4	B147093	1- BLOCK, TRUNNION, ASSEMBLY	*
5	C64133	1- CAM, LOCK, BREECH	
6	C7160455	1- JACKET, BARREL	
7	D35392	1- PLATE, BOTTOM	*
8	C64222	1- PLATE, SIDE, L.H., ASSEMBLY	*
9	C94516	1- PLATE, SIDE, R.H., ASSEMBLY	*
10	D35393	1- PLATE, TOP	
11	A152737	16- RIVET, BOTTOM, PLATE	
12	A20600	2- RIVET, SIDE PLATE, LARGE	
13	A29901	1- RIVET, SIDE PLATE, SMALL	
14	A160656	3- RIVET, SIGHT BRACKET	
15	A20522	1- RIVET, TOP PLATE, LONG	
16	A20711	2- RIVET, TOP PLATE, SHORT	
17	A20527	1- SCREW, BREECH LOCK CAM	
18	BCLX1.1AB	1- SCREW, MACH., FL. HD. NO. 10-32 x 1/4	

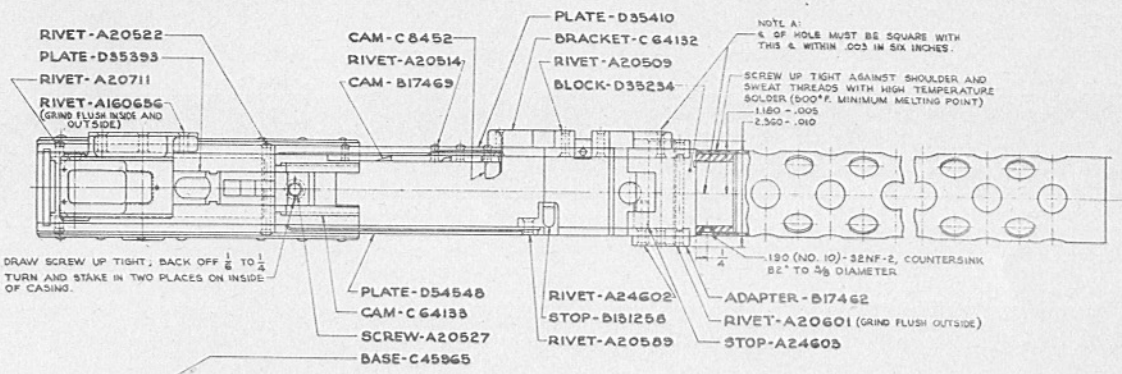

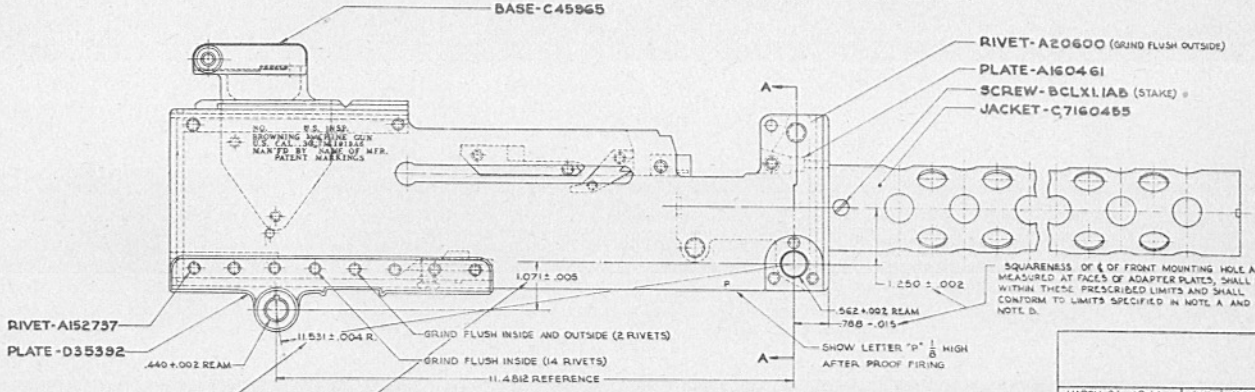

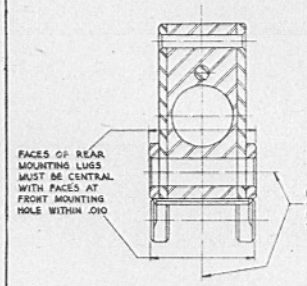

SECTION A-A

NOTE B:
℄ OF MOUNTING HOLE MUST BE SQUARE WITH THIS ℄ WITHIN .003 IN SIX INCHES.

THE LIMITS OF NON PARALLELISM AND SKEWING OF ℄ OF REAR MOUNTING HOLE WITH RESPECT TO ℄ OF FRONT MOUNTING HOLE AS MEASURED AT THE FACES OF THE REAR MOUNTING LUGS, SHALL BE A MAX. .006 IN SIX INCHES AND SHALL BE WITHIN THESE PRESCRIBED LIMITS. *

CASING, ASSEMBLY (7)114037 DO NOT STAMP PART NUMBER

*WILL NOT BE ISSUED FOR FIELD MAINTENANCE EXCEPT AS COMPONENTS OF AUTHORIZED ASSEMBLIES

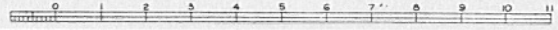

SUPERSEDES OLD TRACING D54505 UNDER REVISION DATE OF 3-21-44

MARCH 21, 1944	CLASS	DIVISION	DRAWING	FILE
REVISIONS				
1 10-8-44				
2 6-4-45				

TOLERANCE ON DIMENSIONS NOT OTHERWISE SPECIFIED
DECIMAL ± —
FRACTIONAL ± 1/64
ANGULAR ± 2°

DRAFTSMAN: MEYER — DATE: 10/12/44 — U.S. INSPECTOR: HHR — DATE INSPECTED:
CHECKED: — DATE: — DATE INSPECTED:

DRG. PERTAINS TO	
51-125	50 B.M.G.
	M1919 A6

SUBMITTED: H.H. Roe

EXAMINED:

APPROVED BY ORDER OF THE CHIEF OF ORDNANCE
Col. Ord. Dept. U.S.A.

D7114037

ORDNANCE DEPT. U.S.A.